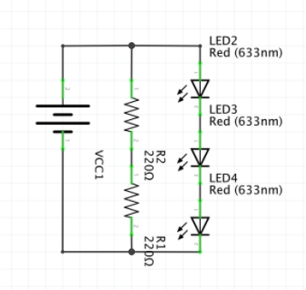
LED2
Red (633nm)
LED3
Red (633nm)
LED4
Red (633nm)
R2
220Ω
R1
220Ω
VCC1

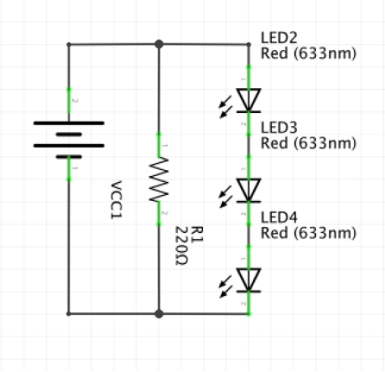
LED2
Red (633nm)
LED3
Red (633nm)
LED4
Red (633nm)
R1
220Ω
VCC1

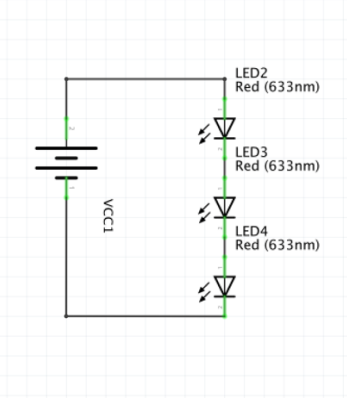
LED2
Red (633nm)
LED3
Red (633nm)
LED4
Red (633nm)
VCC1

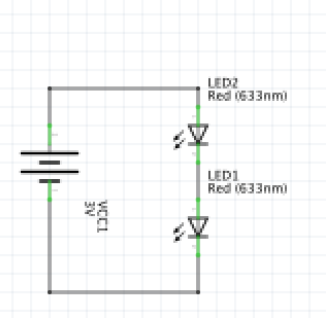
LED2
Red (633nm)
LED1
Red (633nm)
VCC1
3V

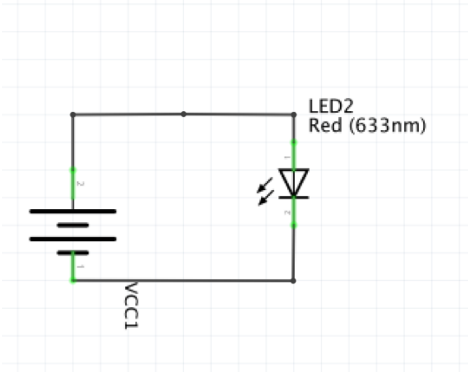
LED2
Red (633nm)
VCC1

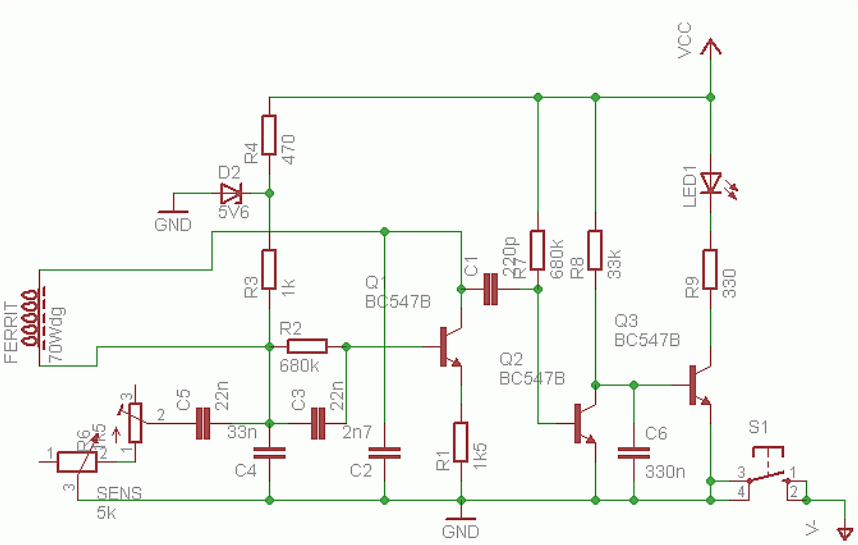
VCC
R4
470
D2
5V6
GND
LED1
R3
1k
Q
BC547B
C1
220p
R7
680k
R8
33k
R9
330
FERRIT
70Wdg
R2
680k
Q3
BC547B
Q2
BC547B
C5
22n
C3
22n
33n
2n7
C6
330n
S1
R6
R5
C4
C2
R1
1k5
SENS
5k
GND
V-

ISC 21127
F42/00
UL APPROVED
ASSEMBLY
ASSY 416 265 ISS
Loma Engineering
© by L+L